IP Link® Device Interface Communication Sheet

This document provides additional assistance with wiring your Extron IP Link enabled product to your device. Different components may require a different wiring scheme than those listed below.

For complete operating instructions, refer to the user's manual for the specific Extron IP Link enabled product or the controlled device manufacturer supplied documentation.

Device Specifications:

Device Type: Video Projector
Manufacturer: Mitsubishi
Firmware Version: N/A
Model(s): SD420U, SD430U, XD400U, XD420U, XD430U, XD470U, XD470U-G

Version History:

Driver Version	Date	IP Link Compiler	GC Version	Notes
5	08/19/2009	1.4.0	3.0.0	Extron Certified. Updated for MLC62 support.
4	03/19/2008	1.3.11.1	2.4	Extron Certified. Added XD470U, XD470U-G
3	0822/2007	1.3.11.1	2.3.0	Extron Certified. Tested on Mitsubishi model XD430U. Added XD420U, SD420U, SD430U model, and Lamp Mode.
2	08/04/2006	1.0.9.3	2.1	Extron Certified. Tested on Mitsubishi XD430U. Fixed Volume (Inc/Dec) on screen problems.
1	07/28/2006	1.0.9.3	2.1	Extron Certified. Tested on Mitsubishi XD430U.

Driver Notes:

1. For XD430U Input Switching Problems
   A. Remove RS-232 cable first
   B. Using the Projector, Press "Menu"
   C. Scroll Right to "Feature", Press "Enter"
   D. Scroll Down to "Language"
   E. Using the Remote Control
   F. Press "Auto Position, Enter, Auto Position"
   G. You should see a Function on the upper left
   H. Press "Enter", Scroll down to Mode Display, Select "OFF"
   I. Press "Menu" to Exit.

Control Commands & States:

AV Mute	On	Off	Off/On
Aspect Ratio	4:3 / 16:9		
Auto Image*	Execute		
Freeze	Off/On		
Input	Computer 1 S-Video	Video	Computer 2
Lamp Mode	Eco Mode	Normal Mode	
Power Control	On	Off	
Volume (Discrete)	0 to 21		
Volume (Step)	Up	Down	

***:** Not available for inputs Video or S-Video.

Status Available:

AV Mute	On	Off	
Connection Status	Connected	Disconnected	
Input	Computer 1 S-Video	Video	Computer 2
Lamp Usage	Hours		
Power Control	On	Off	
Power Status	On	Off	Status Unavailable
Volume (Discrete)	0 to 21		

MLC62 Supported Commands:

AV Mute	On	Off	Off/On
Aspect Ratio	4:3 / 16:9		
Auto Image*	Execute		
Freeze	Off/On		
Input	Computer 1	Video	Computer 2
	S-Video		
Lamp Mode	Eco Mode	Normal Mode	
Power Control	On	Off	
Volume (Discrete)	0 to 21		
Volume (Step)	Up	Down	

*: Not available for inputs Video or S-Video.

Cable and Adapter Requirements:

XD400U uses RS-232C cable (Mini 8P to D-SUB 9P) that is supplied with projector
All other models use F/F RS-232 Null Modem Serial Cable

Notes for the Device:

Serial communication:

Port Type:	RS-232	**Parity:**	None
Baud Rate:	9600	**Stop Bits:**	1
Data Bits:	8	**Flow Control:**	None

For Model(s): XD400U

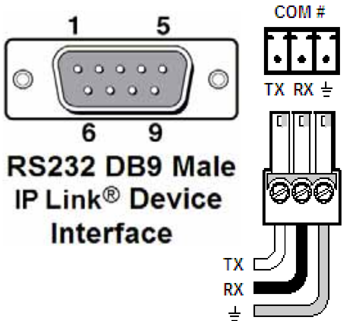

Signal	Pin	Main Cable	Pin	Signal
RxD	2	←	7	TxD
TxD	3	→	1	RxD
GND	5	—	4	GND

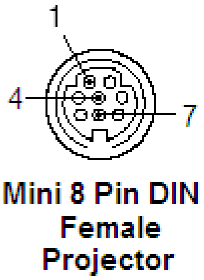

For Model(s): SD420U, SD430U, XD420U, XD430U, XD470U, XD470U-G

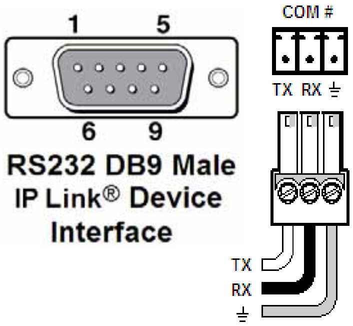

Signal	Pin	Main Cable	Pin	Signal
RxD	2	✕	2	RxD
TxD	3	✕	3	TxD
GND	5	—	5	GND

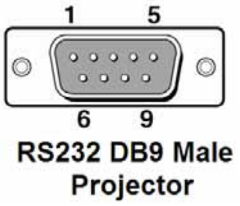

Note: Captive screw connector may also be used as a serial connection.

General Notes: